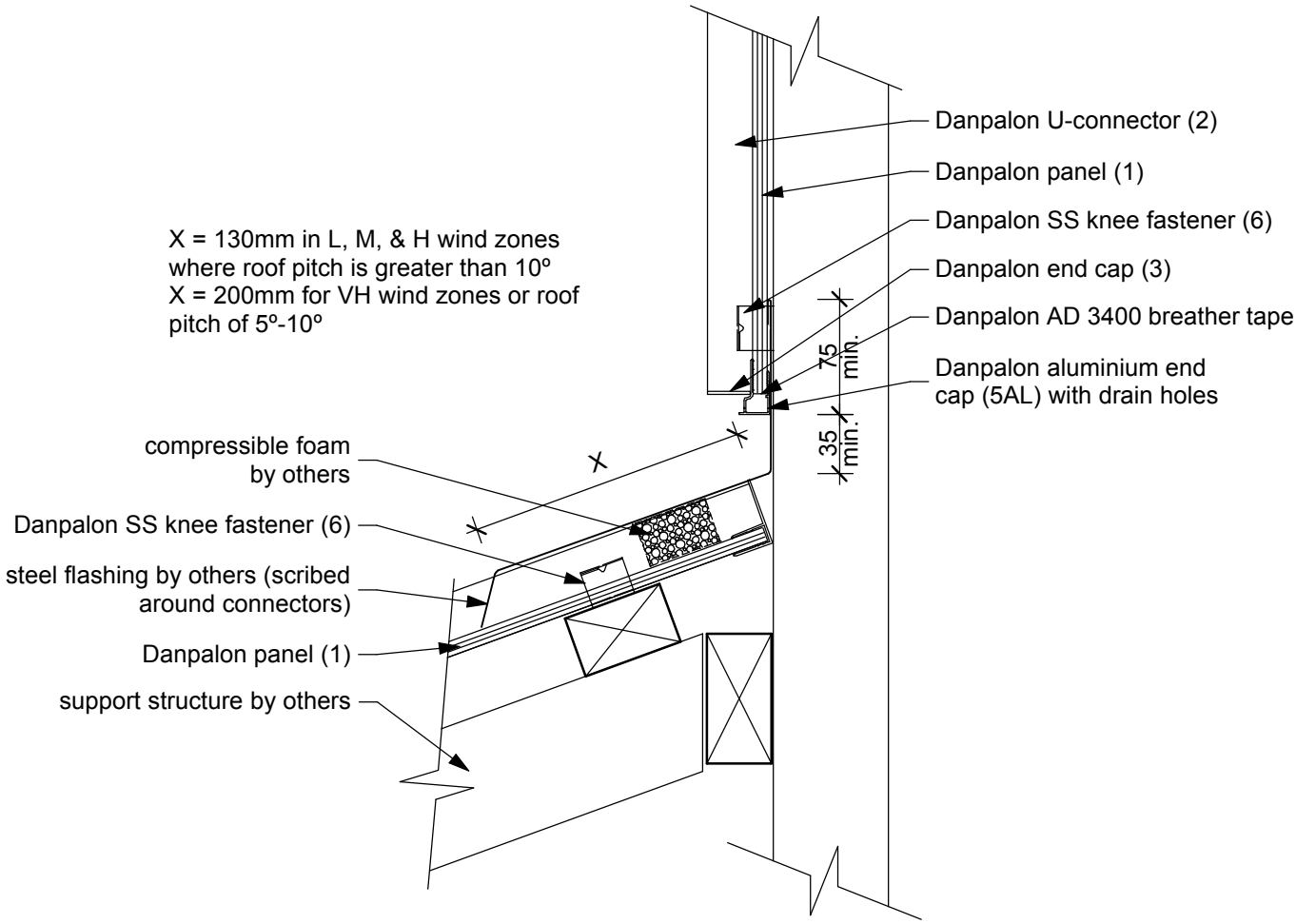

TRANSVERSE APRON FLASHING

1:5