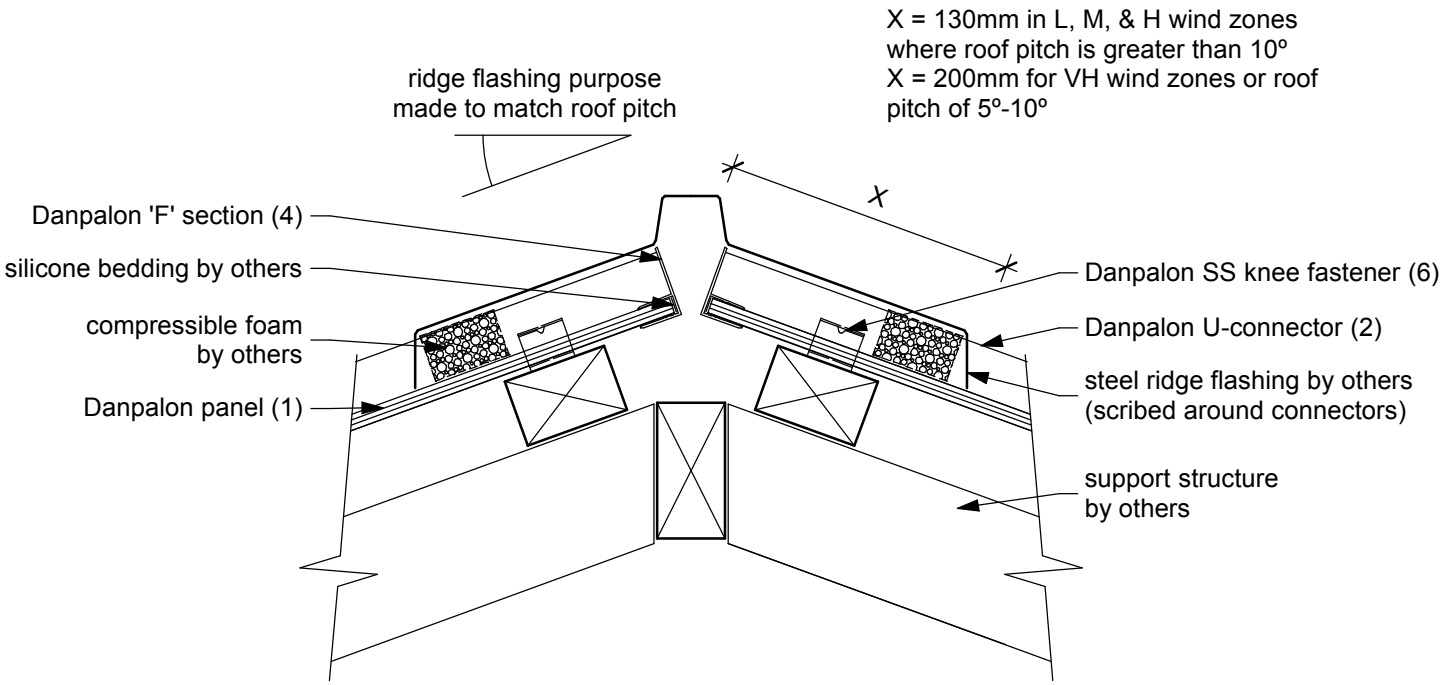

HIP & RIDGE FLASHING

1:5

Note:
Reference Detail Figure 46
Acceptable Solution E2/AS1.