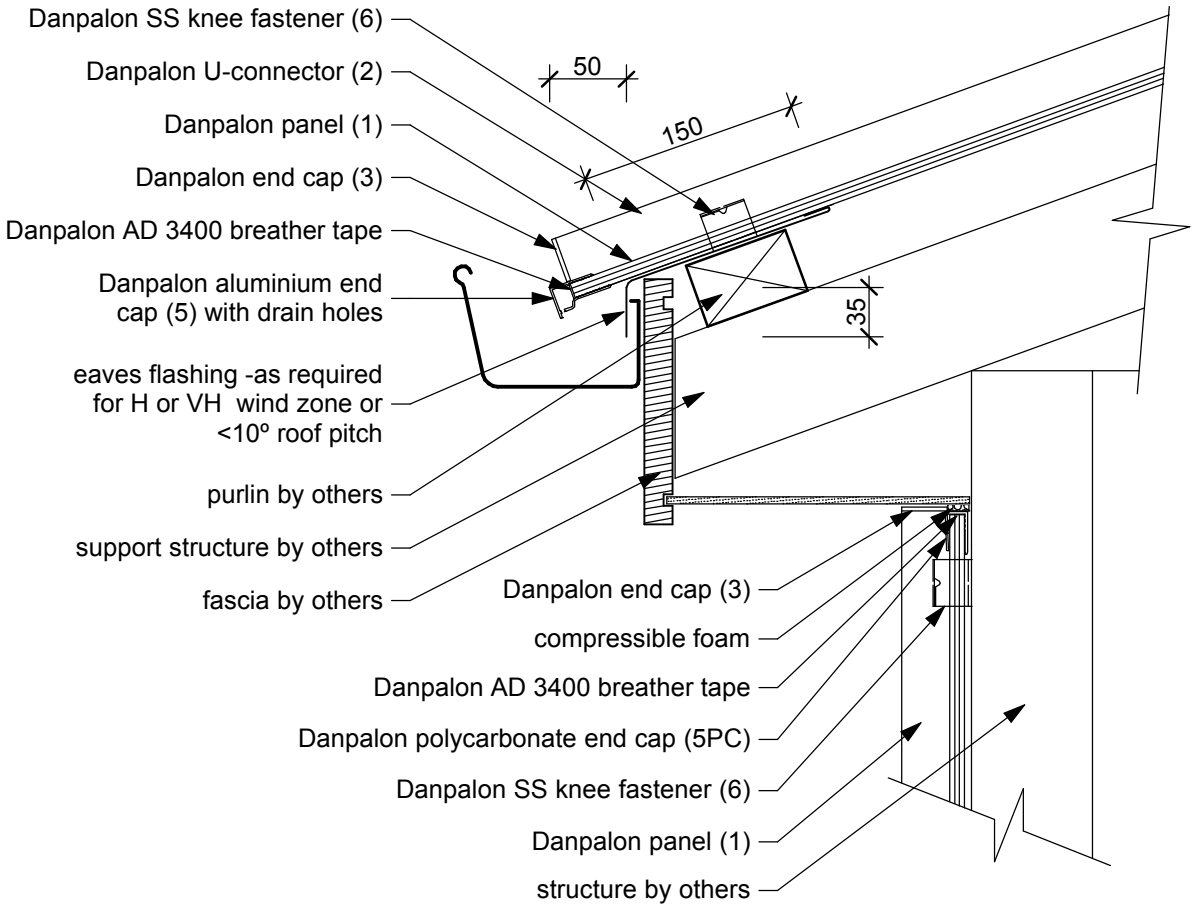

EAVES DETAIL

1:5

Note: Reference Detail Figure 45
Acceptable Solution E2/AS1.